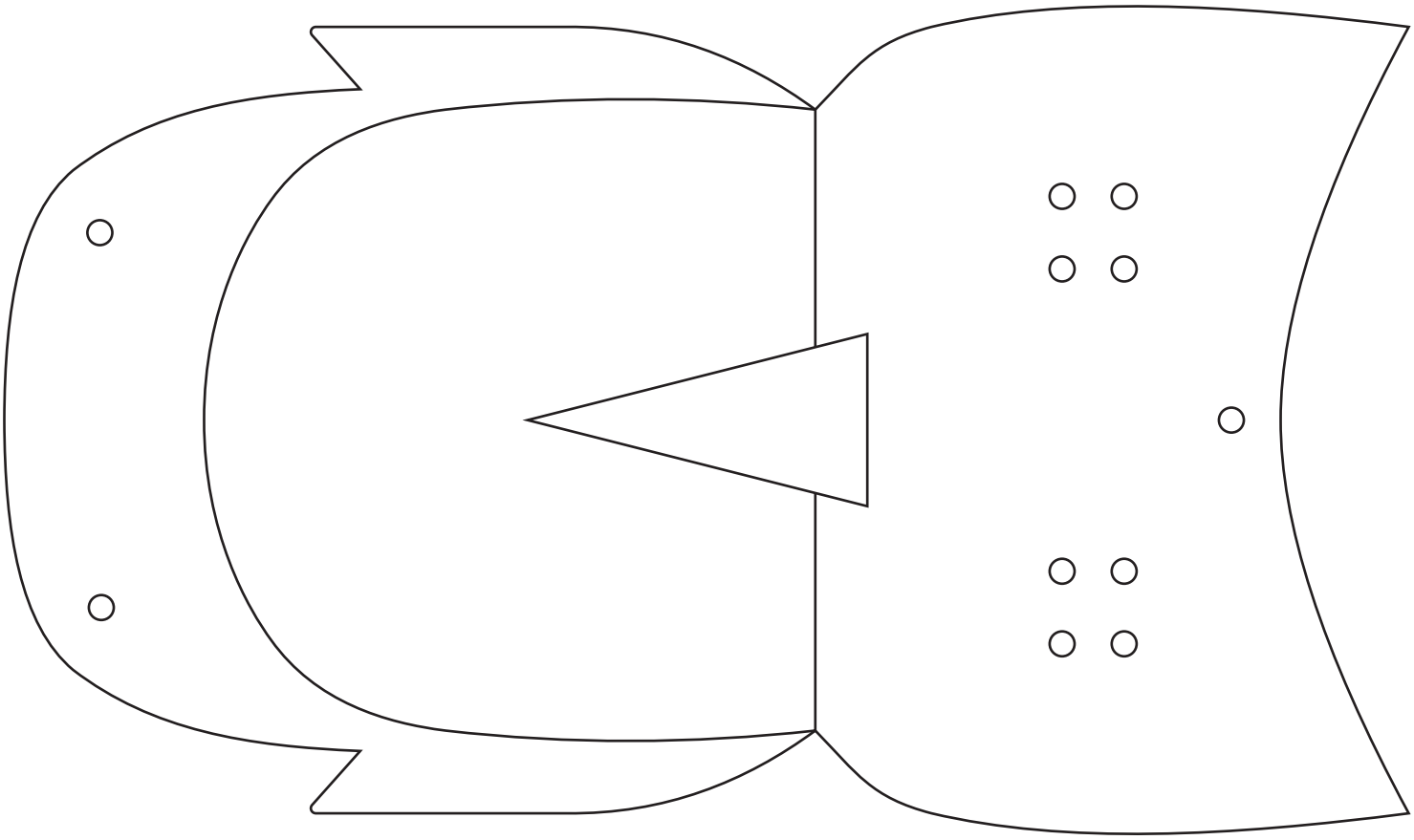

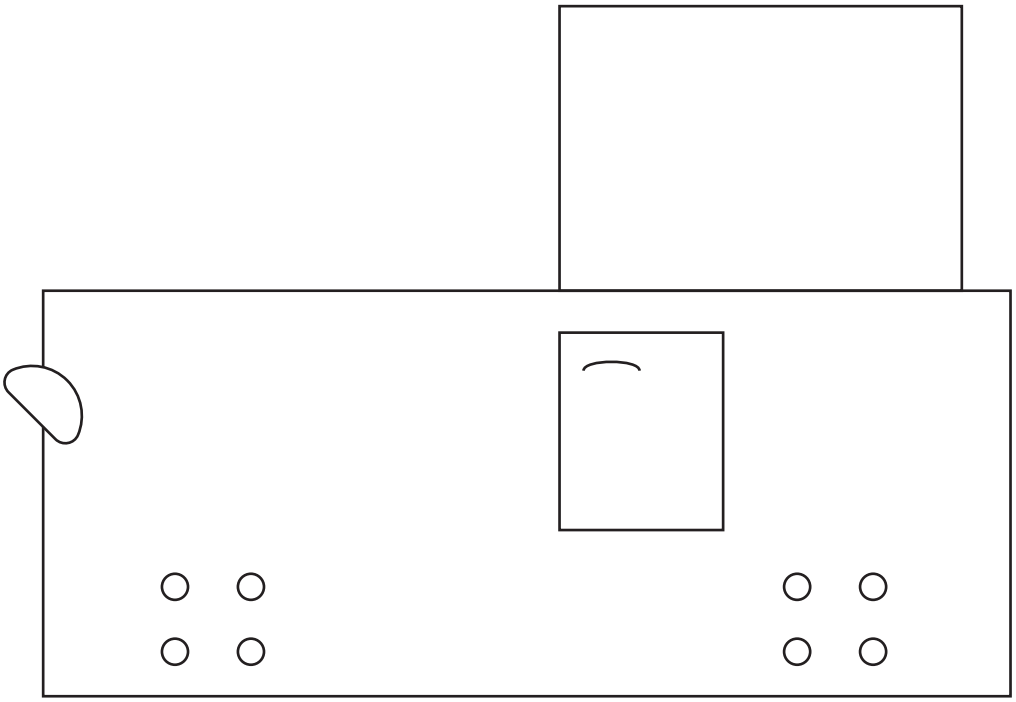

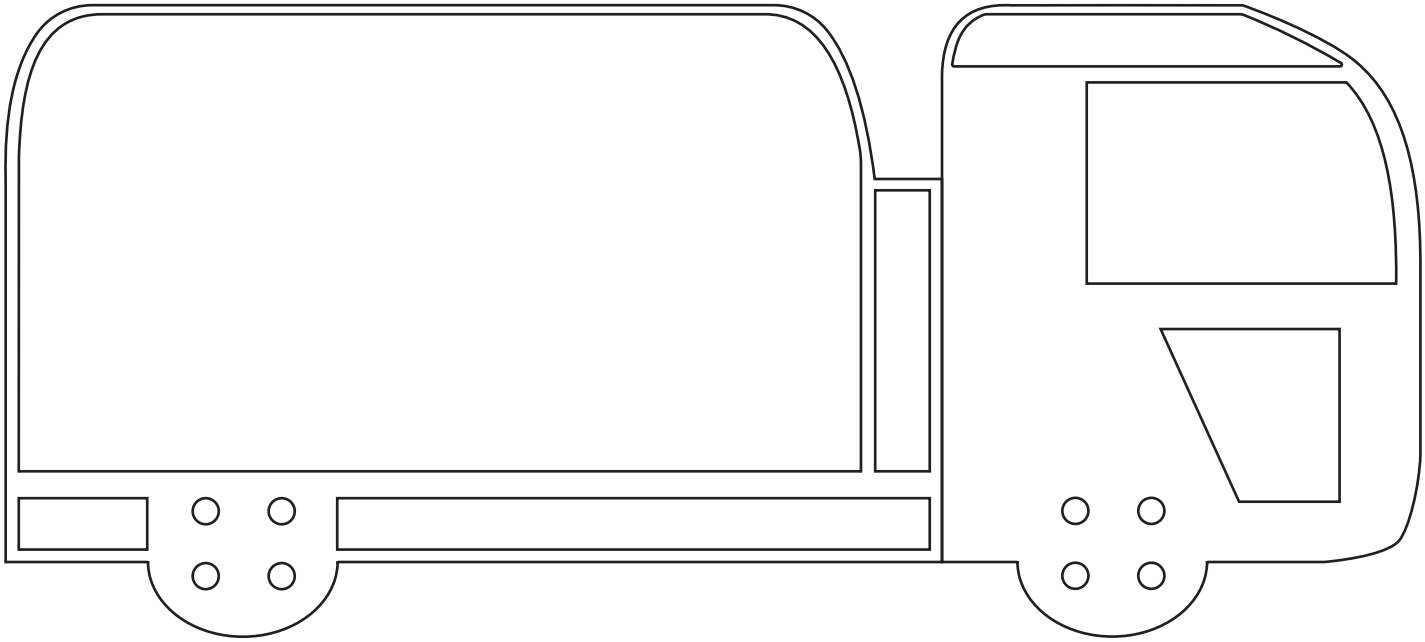

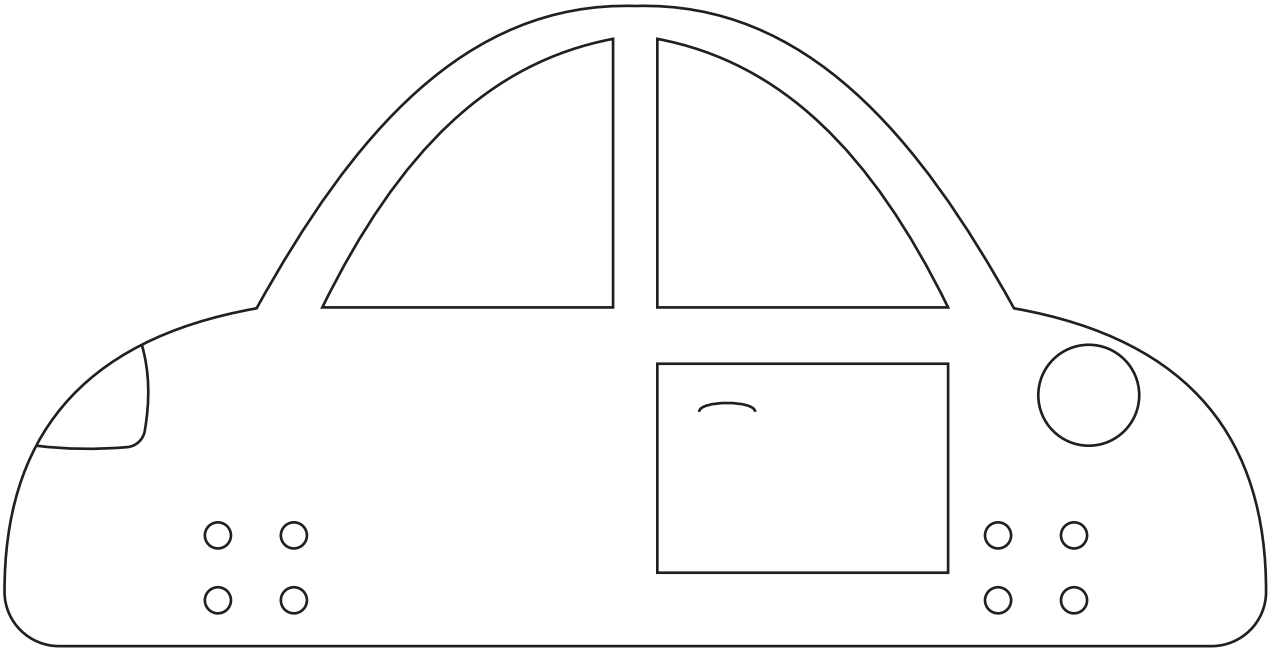

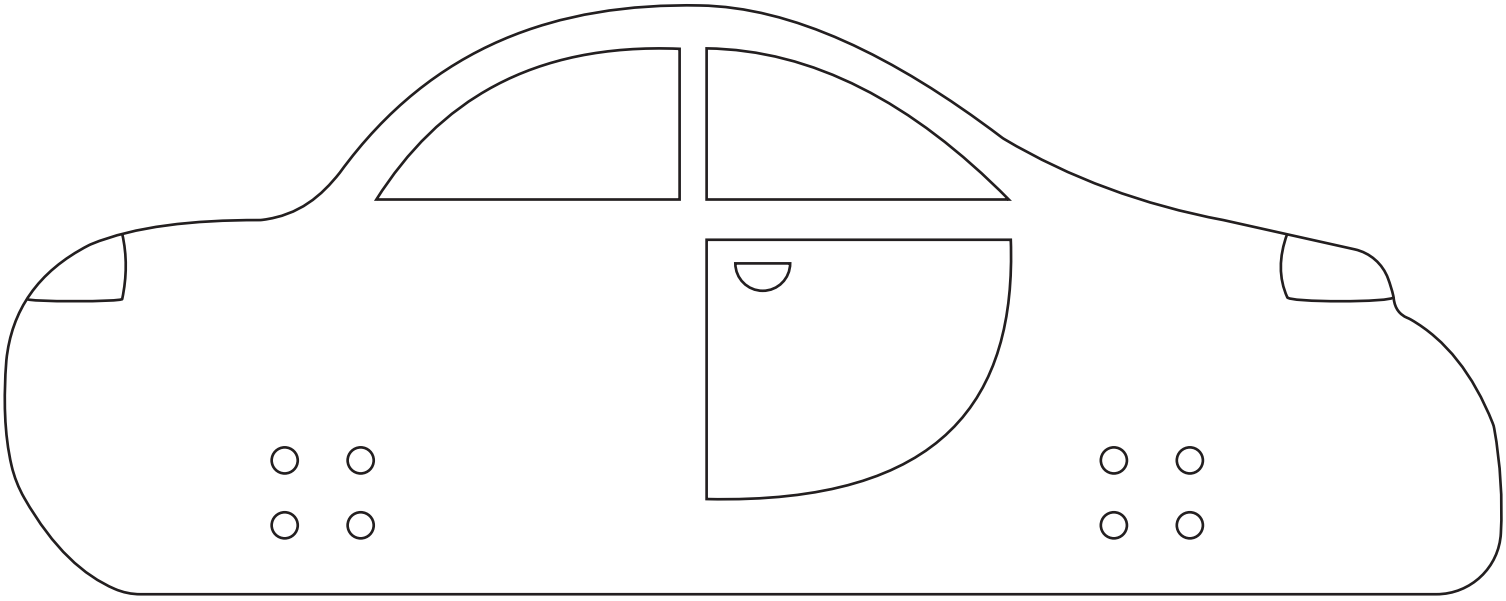
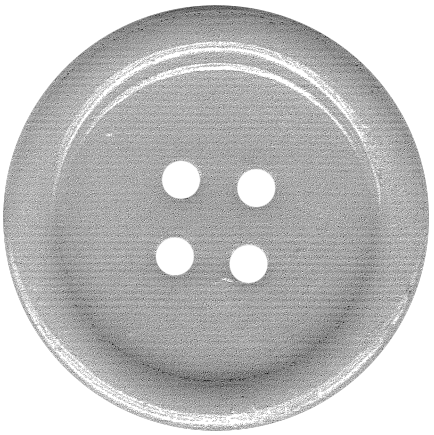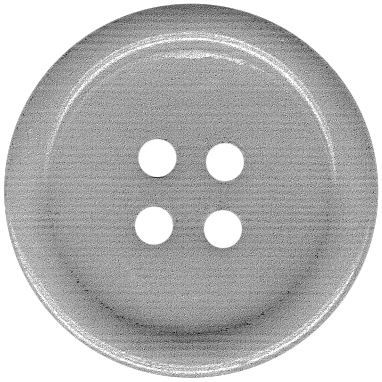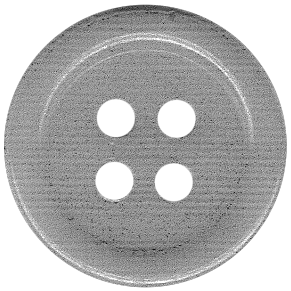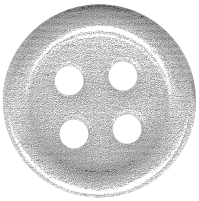
Inspiration
15561